Components, materials and construction features

Body



• *Standard body:* Ductile iron GGG-50 (EN-GJS-500-7).
• *Special version:* Optional manufacturing in Stainless Steel body (AISI 304) – Available diameters: DN 50, DN 65, DN 80, DN 100, DN 125, DN 150 and DN 200.





Perforated stainless steel disc

• *Function:* Acts as a support and guiding plate for the floats.
• *Material:* Stainless Steel AISI 304.
• *Advantage:* Its perforated design ensures an optimized flow of air and water, preventing unwanted retention and protecting the float.



Polypropylene floats

• *Low degradation and high durability:* Polypropylene is a thermoplastic material immune to corrosion and with a low degradation rate when in continuous contact with water or moderate chemical agents.

• *Resistance to Overpressures and Water Hammer:* It offers excellent toughness and structural flexibility, allowing it to absorb dynamic pressure peaks and hydraulic surges without deforming or breaking.

• *Buoyancy:* Its low density guarantees a fast and immediate response from the float to changes in water level, ensuring the airtight opening/closing of the air vent.



Tornillos punta plana

Fijación por tornillos de punta plana y sistema de estanqueidad



• *Seguridad antiseparación:* A través de la zona de inserción situada en la brida superior, los tornillos de punta plana fijan mecánicamente el cuerpo de la ventosa con el cuerpo del deflector.
Esto impide la separación accidental entre ambas partes, brindando seguridad ante maniobras de elevación o manipulación de la ventosa desde la argolla.

• *Estanqueidad superior:* La brida superior incorpora una junta de EPDM que recubre la brida superior, asegurando un sellado hermético e inalterable en el acoplamiento entre el cuerpo principal y el cuerpo del deflector.

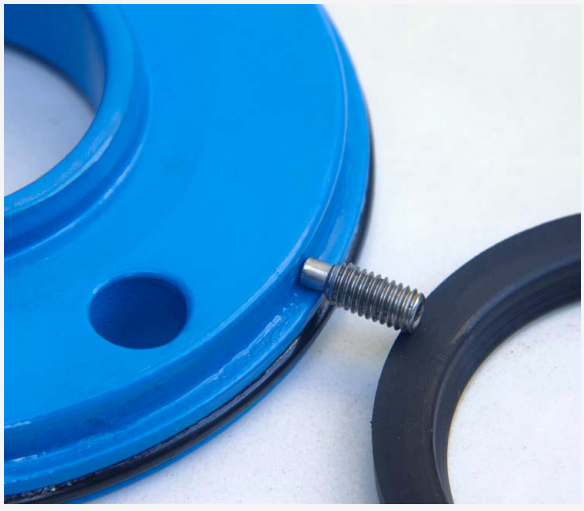

Filtro de malla (protección anti-insectos)

• *Función principal:* La malla de acero inoxidable impide el ingreso de insectos, hojas o cuerpos extraños dentro del cuerpo de la ventosa durante la fase de admisión masiva de aire, evitando la posible contaminación de la tubería y bloqueos en el mecanismo de cierre.

• *Pantalla cónica:* Fabricada en malla desplegada de acero inoxidable con geometría troncocónica. Su forma en 3D aumenta la superficie efectiva de filtración y paso de aire, reduciendo la pérdida de carga y minimizando el riesgo de colmatación por acumulaciones externas.





Product features and benefits

• Single chamber with a golden ratio design to generate fantastic outline.
• Full bore and reduced bore body in ductile iron and stainless steel, maximum PN 40 bar rated, provided with internal ribs for accurate guiding of the floats.
• Aerodynamic flow path of air discharge, air release and air entrance.
• Tangential d rainage to ensure fully drain.
• Composed of cylindrical floats achieve miscellaneous functions.
• Replacement between three floats and two floats can be easily performed from the top.
• Stainless steel plate under the bottom float to eliminate surged flow impact to the floats in short time.
• Nozzle can be different port size to fit for demands of different valve models.
• Flat venting screen in stainless steel as a standard to prevent the entrance of insects, while umbrella venting screen as a premium.

Aplications

• Main transmission lines.
• Water distribution networks.
• Irrigation systems.
• In general this model is used on changes in slope and at the high points of the pipeline.

Working conditions

Medium	Water
Temperature	0-70º
Max. pressure	40bar
Min. pressure	0,2bar (lower on request)

Size

• DN50 300 for Ductile Iron
• DN50 200 for Stainless Steel (CF8/CF8M/Duplex)

Design and test standard

• Designed in compliance with EN 1074/4 and AWWA C 512.
• Epoxy painting applied through fluidized bed technology blue RAL 5005.
• Customized changes on the flanges and painting on request.

Flange standard

• BS EN 1092 2 PN10 16 25 40
• ANSI Class 125 150 250

Technical specification

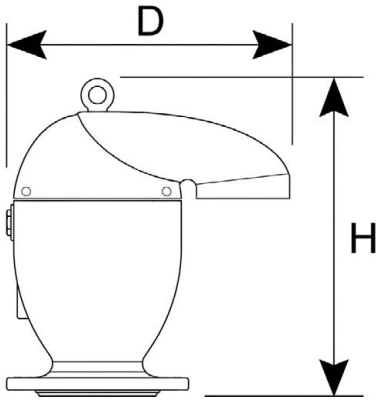

Inlet size	Connection type	Width (D)	Height (H)	Weight
Inches	---	Inches	Inches	lbs
mm		mm	mm	kg
2”	Threaded connection	8,858	11,102	17,632
DN50		225	282	8
2”	Flanged connection	9,134	11,811	23,142
DN50		232	300	11
3”	Flanged connection	12,244	14,016	38,129
DN80		311	356	17
4”	Flanged connection	14,606	16,142	50,912
DN100		371	410	23
6”	Flanged connection	19,409	22,402	116,812
DN150		493	569	53
8”	Flanged connection	26,024	30,315	275,500
DN200		661	770	125

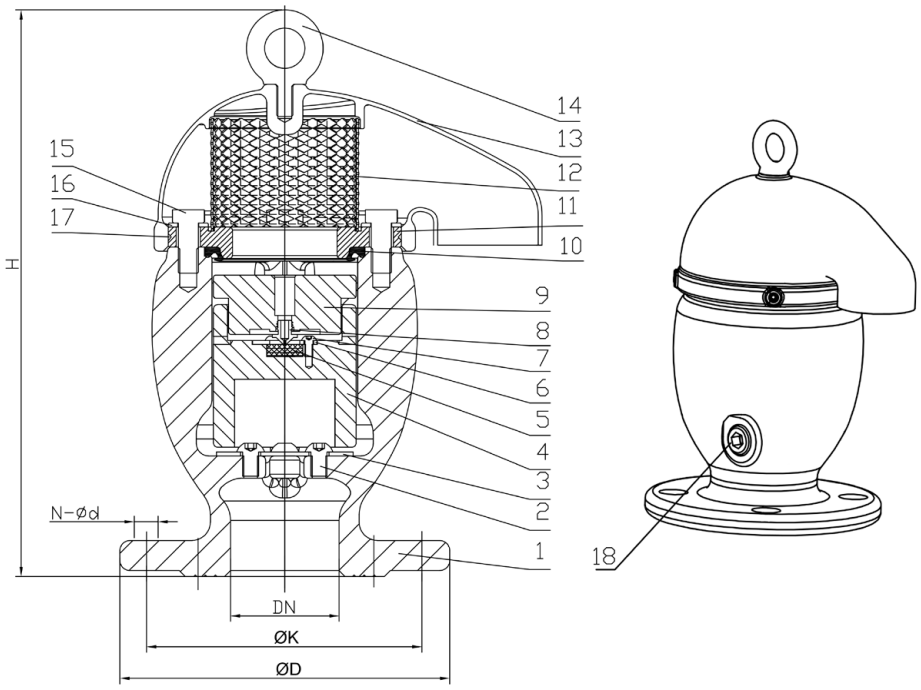

Materials

ITEM	PART	MATERIAL
1	Valve body	QT500-7
2	Screw (o Bolt)	304
3	Seat ring	PP
4	Lower float	PP
5	Gasket (o Seal)	EPDM
6	Gasket retainer	304
7	Screw (o Bolt)	304
8	Nozzle	304
9	Upper float	PP

ITEM	PART	MATERIAL
10	Sealing ring (o O-ring)	NBR
11	Upper flange	45#
12	Strainer (o Screen)	304
13	Cover (o Cap)	QT500-7
14	Eye bolt (o Lifting ring)	304
15	Nut	304
16	Washer	304
17	Closing disc	304
18	Drain plug	304

Weights and dimensions

DN	øD (mm)	øK (mm)	N-ød (mm)	H(mm)
	PN16	**PN16**	**PN16**	**PN16**
50	165	ø125	4-ø19	
65	185	ø145	4-ø19	-
80	200	ø160	8-ø19	-
100	220	ø180	8-ø19	-
150	285	ø240	8-ø23	-
200	340	ø295	12-ø19	

Air performance chart of V3F

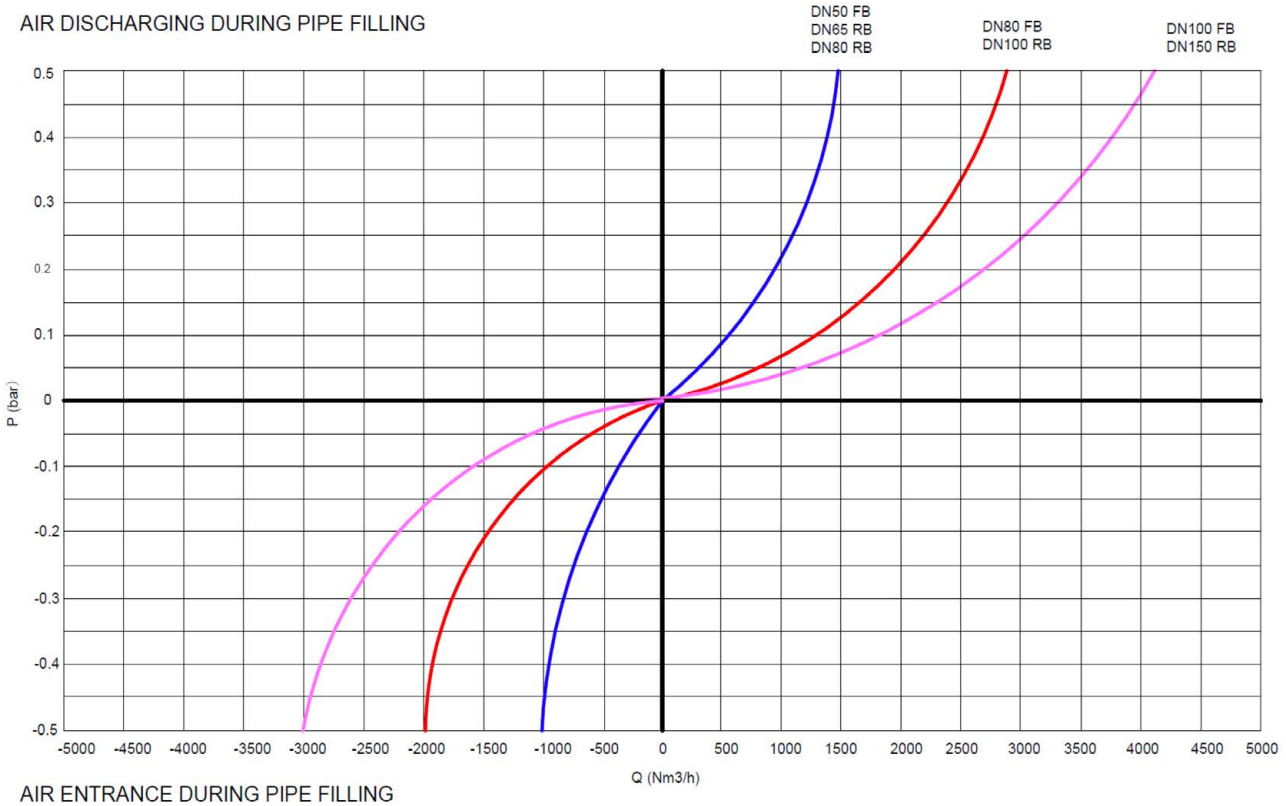

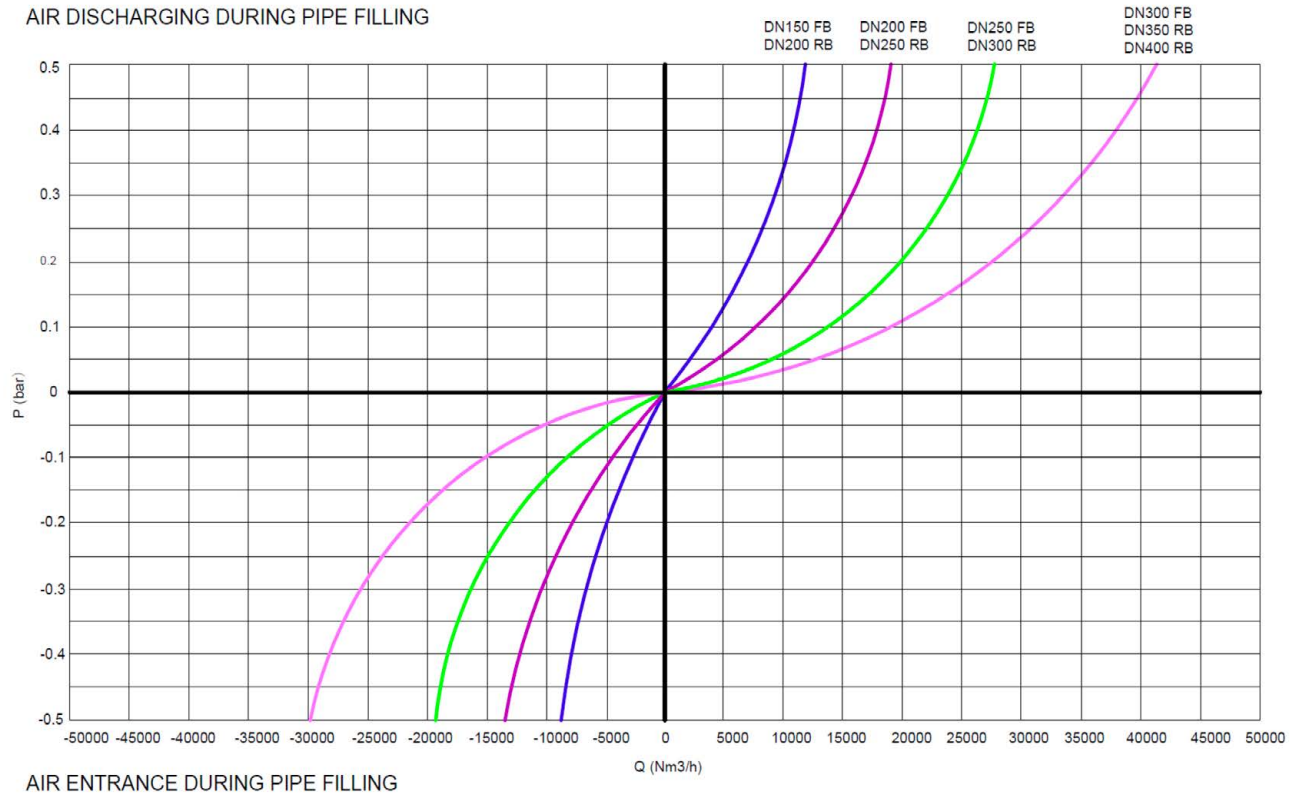

Air performance chart of V4F

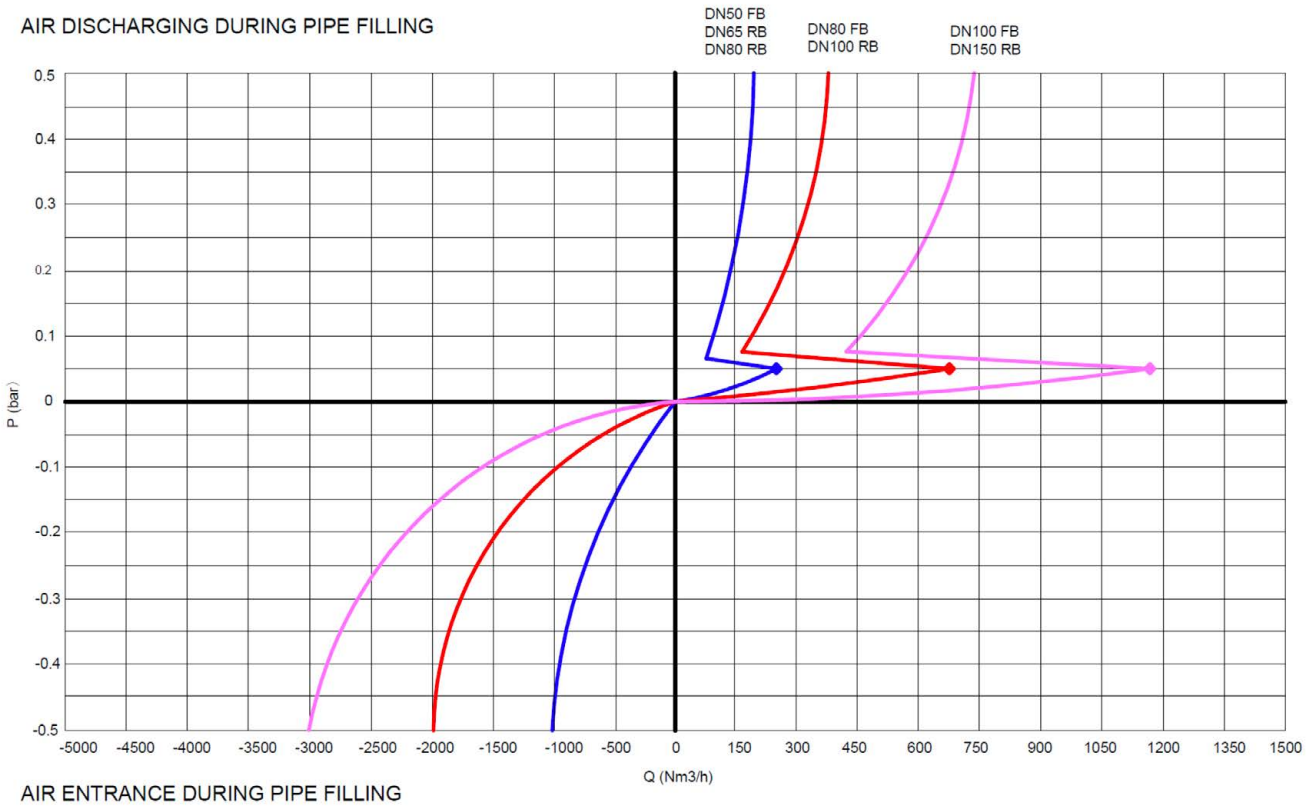

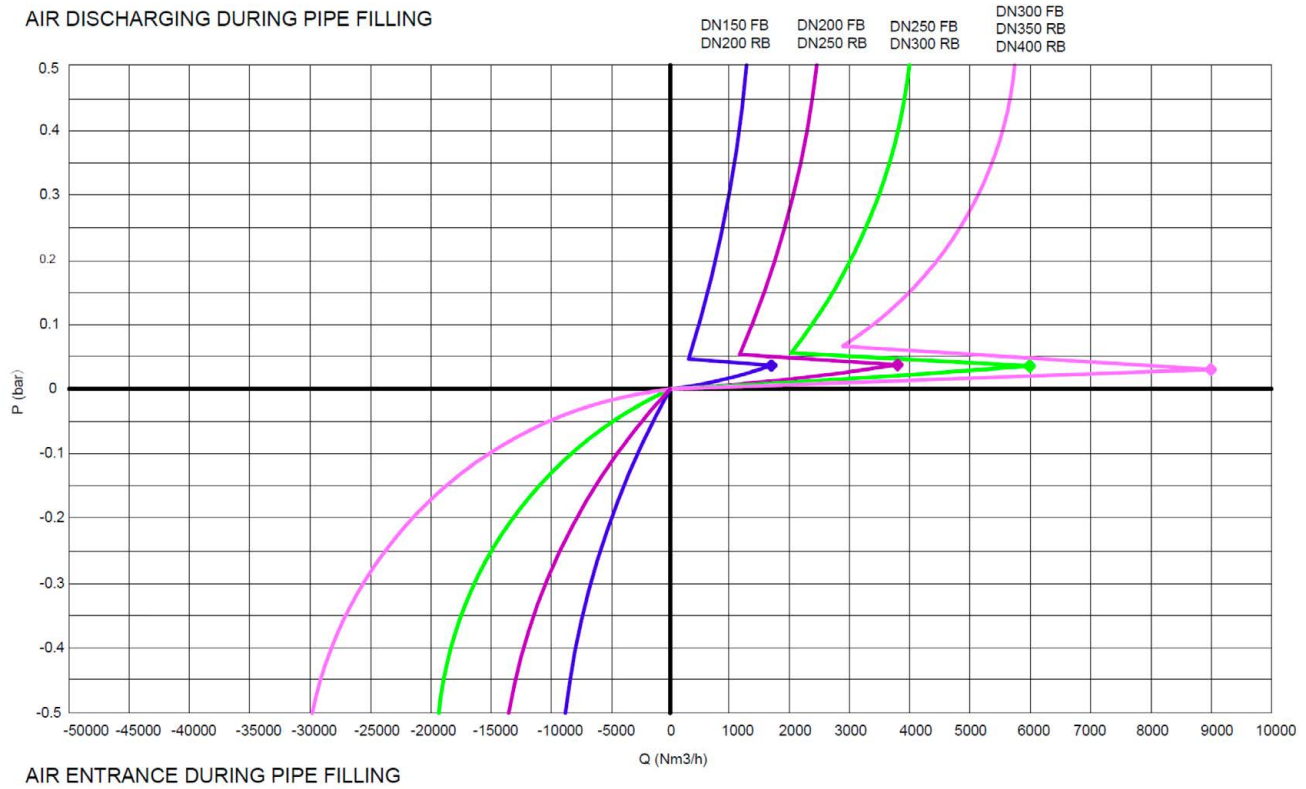

Air release chart of V4F & V3F

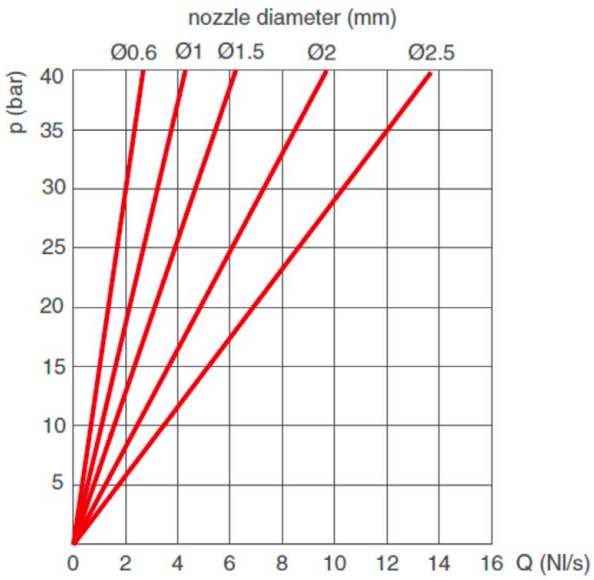

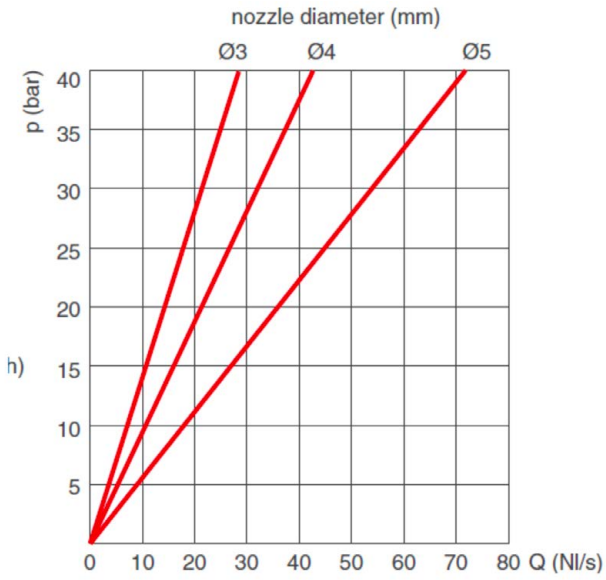

AIR RELEASE DURING WORKING CONDITIONS

Full bore	Reduced bore	PN10	PN16	PN25	PN40
DN25	-	0,6	0,6	0,4	0,4
DN50	-	1,0	1,0	0,6	0,6
-	DN65				
-	DN80				
DN80	-	1,5	1,5	1,0	1,0
-	DN100				
DN100	-	2,0	2,0	1,5	1,5
-	DN150				
DN150	-	3,0	3,0	2,0	2,0
-	DN200				
DN200	-	4,0	4,0	2,5	2,5

Installation

Vertical vortex pump application

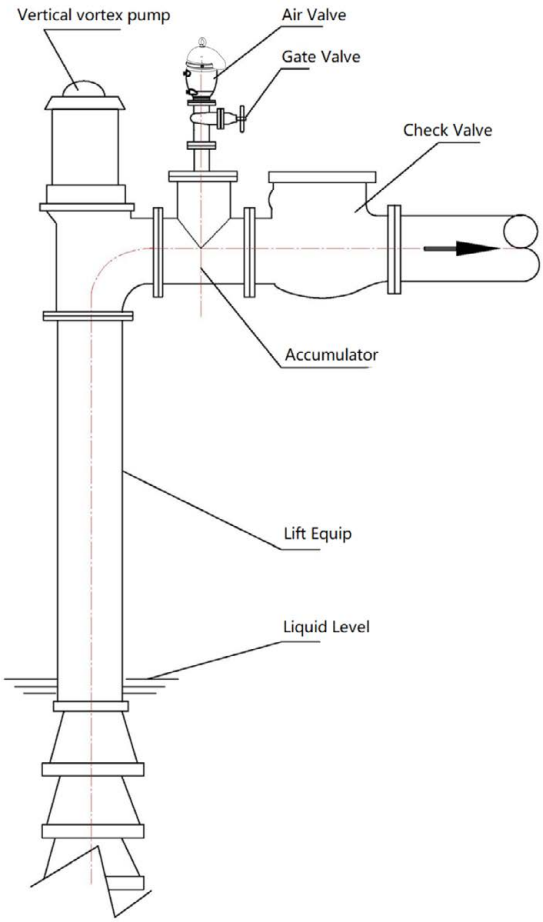

Well application

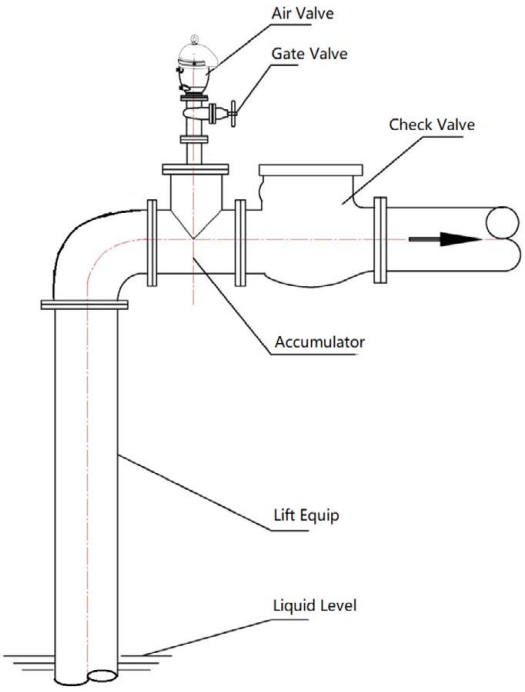

Centrifugal pump application

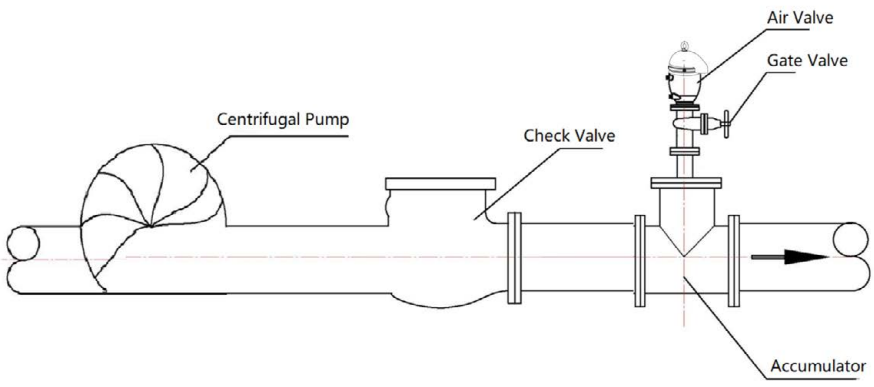

Instructions

1. Before installation, remove foreign material such as weld spatter, oil, grease, and kinds of dirts from the pipeline.

2. Prepare pipe ends and install valves in accordance with the pipe manufacture's instructions for the joint used. The water combination air valve should always be installed in a vertical position, an isolation valve should be installed before the air valve to make sure maintenance convenience.

3. Make sure enough space for valve assembly and disassembly, then tighten the air valve's flange bolts or studs in a crisscross pattern and minimum of four stages.

4. A Strainer before air valve is strongly recommended to avoid any suspended objects.



A. Inlet isolation valve
B. Strainer
C. Pressure reducing valve
D. Combined air valve

Operation

The combination air valve is under automatic operation in the range from permitted low pressure to high pressure (PFA).

Manteinance

The combination air valve is automatic in operation and requires very little maintenance as soon as there is no suspended objects or dirts interrupt the floats and seals. It should always be installed in a vertical position. A monthly visual inspection for leakage is recommended. A malfunction of the air valve can be identified by water seepage of through the air release nozzle and/or through the main seal. While a malfunction occurs, the following steps should be taken to repair the valve.

1. Inspection or maintenance can be accomplished without removing the valve from the line.
2. Repair kits with new seals, nozzle and floats are recommended to be prepared on hand before maintenance work begins.
3. To change the parts where the visual leakage occurs.

⚠WARNING!
Before maintenance, the isolating valve before the air valve must be fully closed to avoid water escape from the pipeline.

Trouble shooting

Symptom	NO.	Probable cause	Solution
Valve leaks at flange joint	1	Loose flange bolting	Tighten flange bolting
	2	Blown flange seal	Replace flange seal
	3	Miss-alignment or damage to field piping	Adjust miss-alignment or repair piping or supports
	4	Damaged flange face or improper flange connections	Repair flange, replace valve body or adjust flange connections
Valve leaks out of the seal ring	1	Valve is not vertical	Place the valve in a vertical position
	2	Possible corrosion through the wetted parts	Check the fluid chemicals compatibility
	3	Dirty seat or top float	Clean seat or float
	4	Worn seat or float	Replace seat or float
	5	Worn O-ring between on the mid float	Inspect and replace O-ring
Valve leaks out of the air release nozzle	1	Valve is not vertical	Place the valve in a vertical position
	2	Possible corrosion through the wetted parts	Check the fluid chemicals compatibility
	3	Dirt accumulated on the air release nozzle	Inspect and clean the air release nozzle, replace if necessary

Disassembly

Disassemble the parts in order per the following steps, and be careful to the warning matters:

⚠WARNING!
Servicing the air/vacuum valve while the pipeline is under pressure can cause personal injury or equipment damage. Relieve pipeline pressure or shut off isolation valve before servicing the air/vacuum valve.

1. Relieve pipeline pressure or shut off isolation valve before repairing the air valve.
2. Slowly remove the tangential drain plug to drain internal water.
3. Remove cap screws, cap, screen, top flange bolt/washer and top flange.

⚠WARNING!
When removing the screen be aware of sharp edges, use pretective gloves and exert care during handling

4. Remove seal ring under the top flange.
5. Inspect seal ring surface, check whether any worn or damaged places, change to a new one if needed.
6. Pull out the top float, mid float, lower float.
7. Inspect the O-ring on the mid float, check whether any worn or damaged places, change to a new one if needed.
8. Inspect the air release nozzle, clean it with some water and replace it if needed.
9. Inspect on the lower float's seal against to the air release nozzle, clean it with some water and replace it if needed. It is suggested to be changed every semi-annual for normal operation.
10. Check the body inside chamber to see if foreign matters or dirt prevent floats from seating properly inside the valve body. Clean if necessary.
11. Inspect all connections of linkage for excessive wear.
12. Clean all surfaces before re-assembly.